2 Finger, 3 Finger, 4 Finger Parallel Style Air Gripper

Series MHS

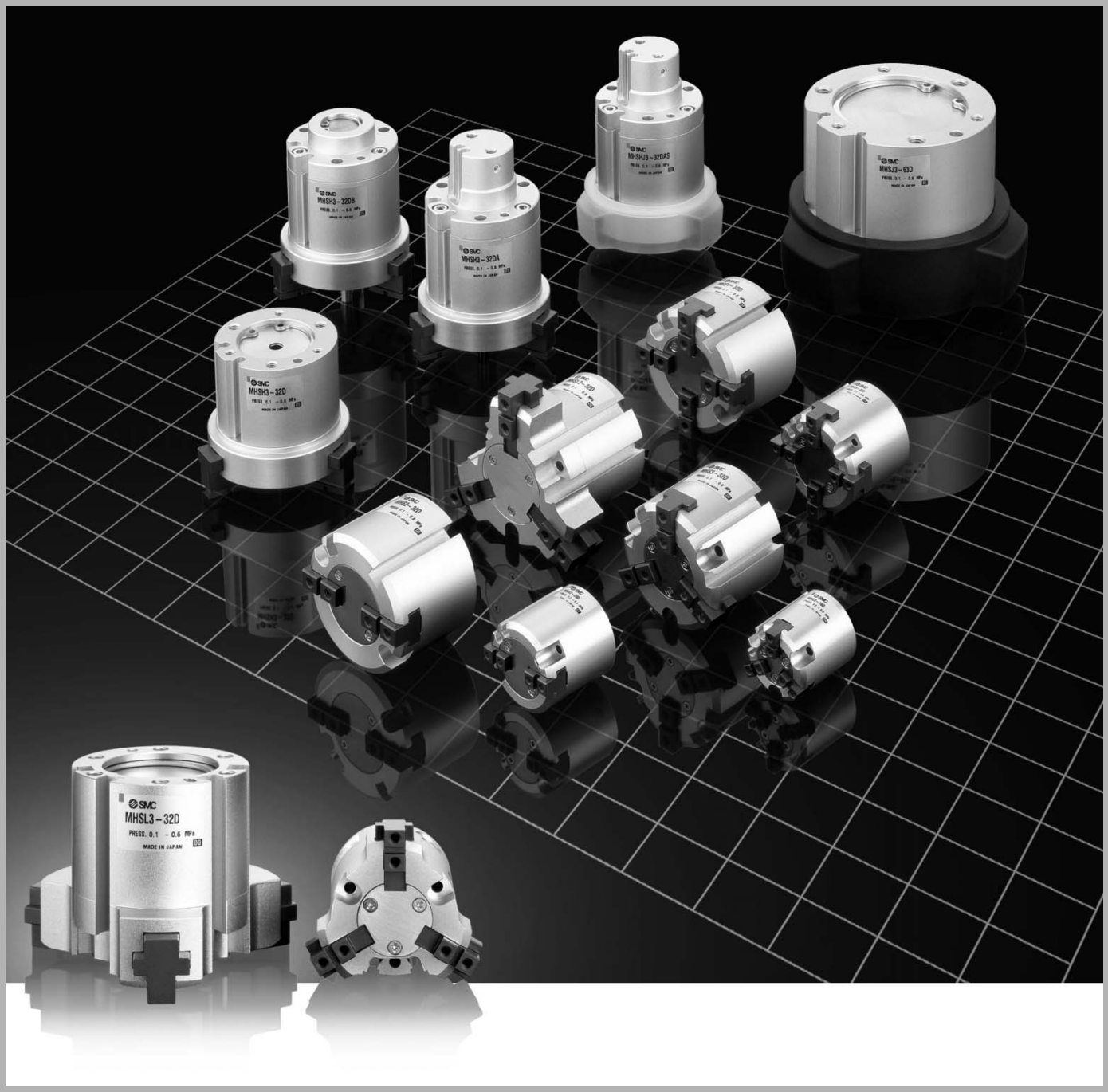

Dimensions

MHS4-16D to 25D

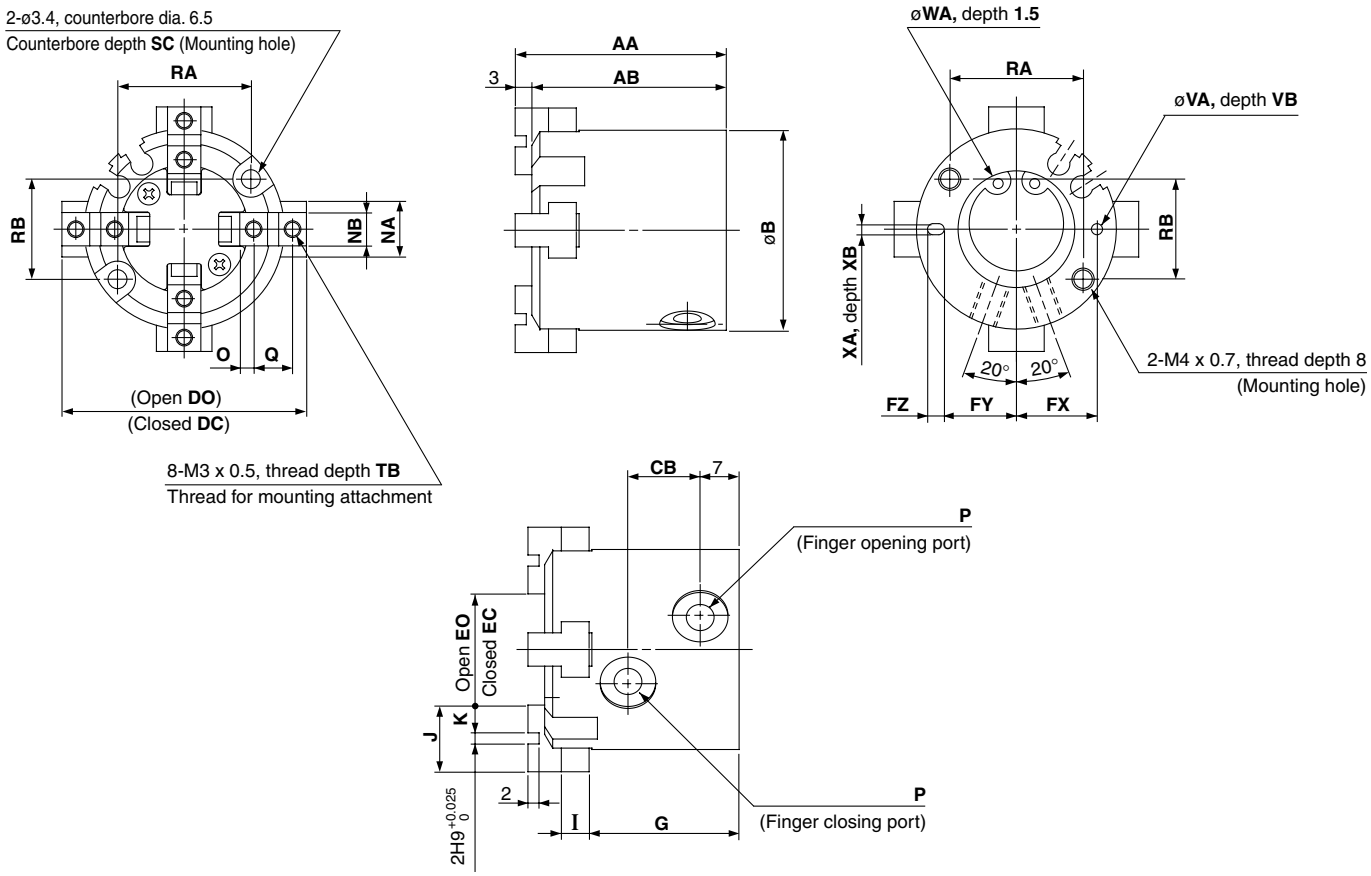

Auto switch mounting groove dimensions (2 locations)

MHS4-16D

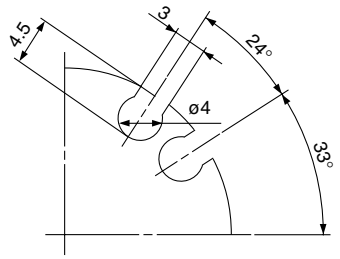

MHS4-20D

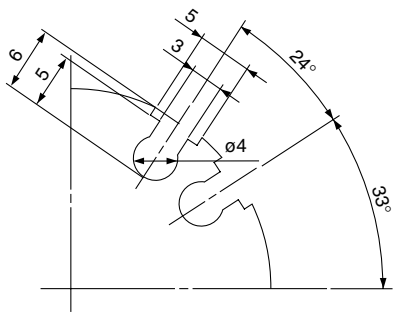

MHS4-25D

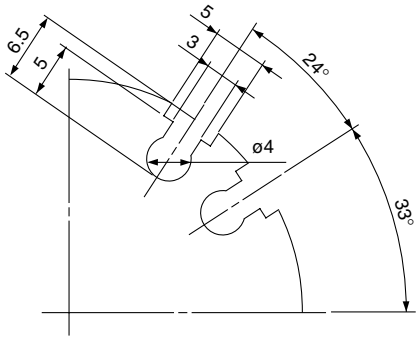

(mm)

Model	AA	AB	B	CB	DC	DO	EC	EO	FX	FY	FZ	G	I	J	K	NA	NB	O	P	Q
MHS4-16D	35	32	30	11	33	37	13	17	12.5	11	3	25	4	10	4	8	5h9 $^{0}_{-0.030}$	2	M3 x 0.5	6
MHS4-20D	38	35	36	13	39	43	15	19	14.5	13	3	27	5	12	5	10	6h9 $^{0}_{-0.030}$	2.5	M5 x 0.8	7
MHS4-25D	40	37	42	15	48	54	20	26	17	14.5	5	28	5	14	6	12	6h9 $^{0}_{-0.030}$	3	M5 x 0.8	8

Model	RA	RB	SC	TB	VA	VB	WA	XA	XB
MHS4-16D	18	16	8	5	2H9 $^{+0.025}_{0}$	2	17H9 $^{+0.043}_{0}$	2H9 $^{+0.025}_{0}$	2
MHS4-20D	24	18	9.5	6	2H9 $^{+0.025}_{0}$	2	21H9 $^{+0.052}_{0}$	2H9 $^{+0.025}_{0}$	2
MHS4-25D	26	22	10	6	3H9 $^{+0.025}_{0}$	3	26H9 $^{+0.052}_{0}$	3H9 $^{+0.025}_{0}$	3