82M-3.....6. SERIES

Pneumatic Power Clamps | Dimensions

Model	B7a ±0,1	B23 Max.	L17
82M-3E03..6...	50	78	12
82M-3N03..6...	55		
82M-3E23..6...	50	96	21
82M-3N23..6...	55		
82M-3ND0..6...	55	106	26

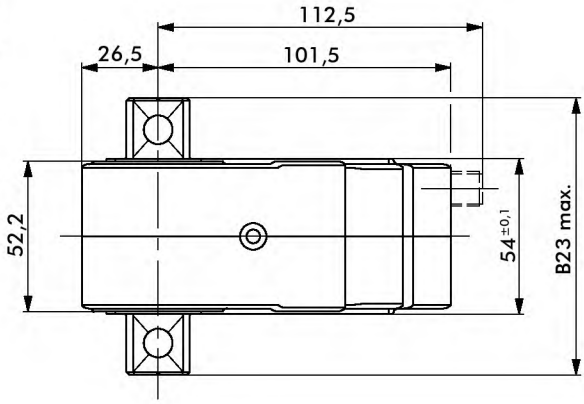

Dimensions of the driven shaft

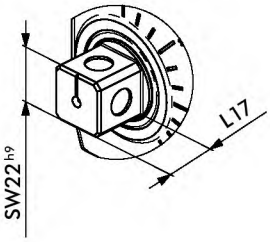

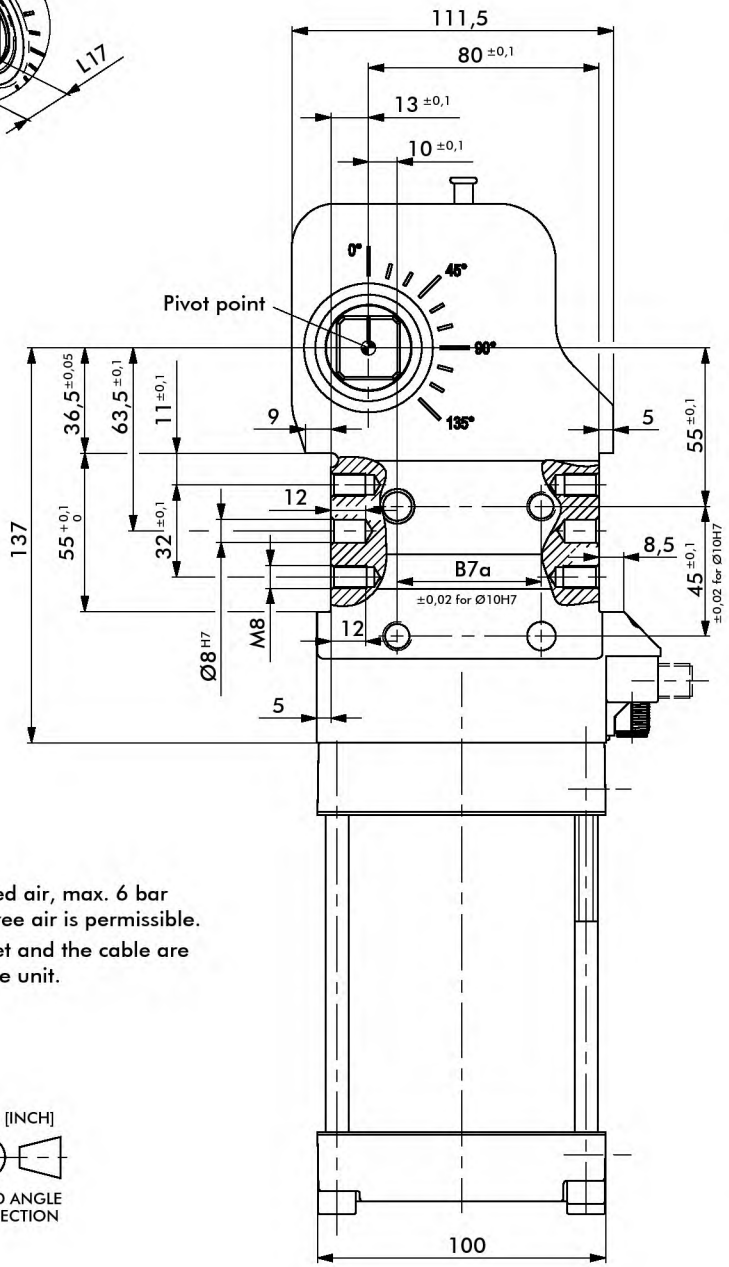

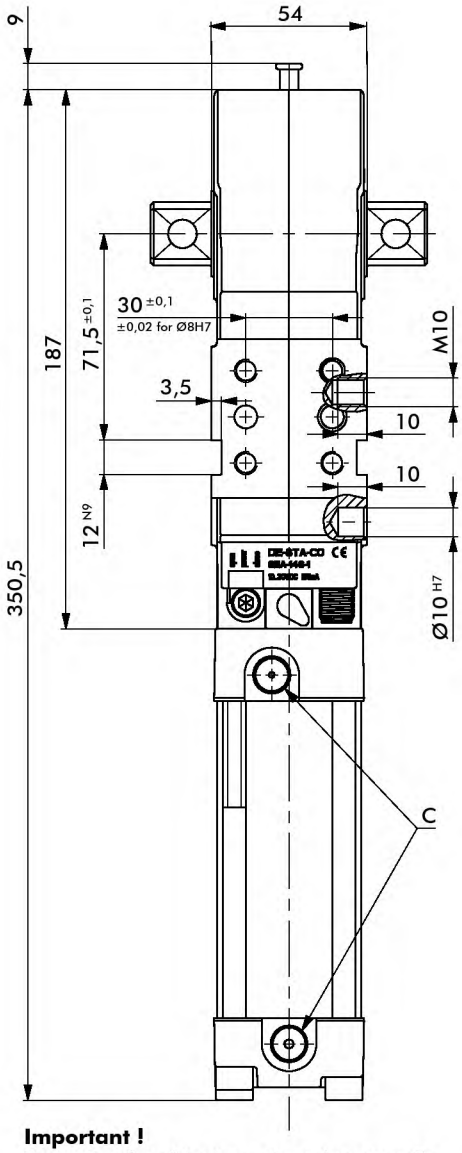

Power by compressed air, max. 6 bar operation with oil-free air is permissible.

The connector socket and the cable are not supplied with the unit.

mm [INCH]

THIRD ANGLE PROJECTION

Important !
For optimal cushioning external pneumatic one-way, flow control valves should be used.