82M-3E....5. SERIES

Pneumatic Power Clamps | Dimensions

Model	B23 Max.	L17
82M-3E03..5...	72	12
82M-3E23..5...	90	21

Dimensions of the driven shaft

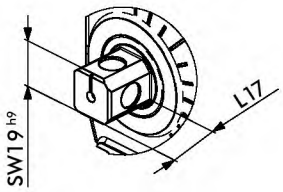

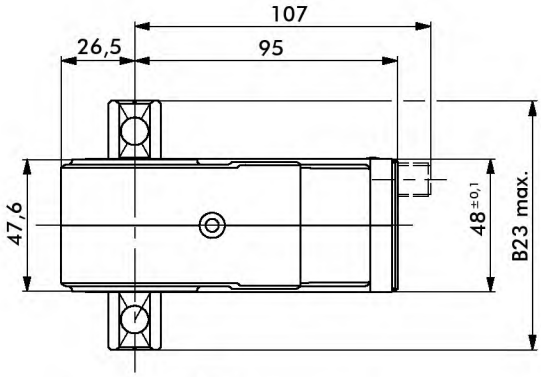

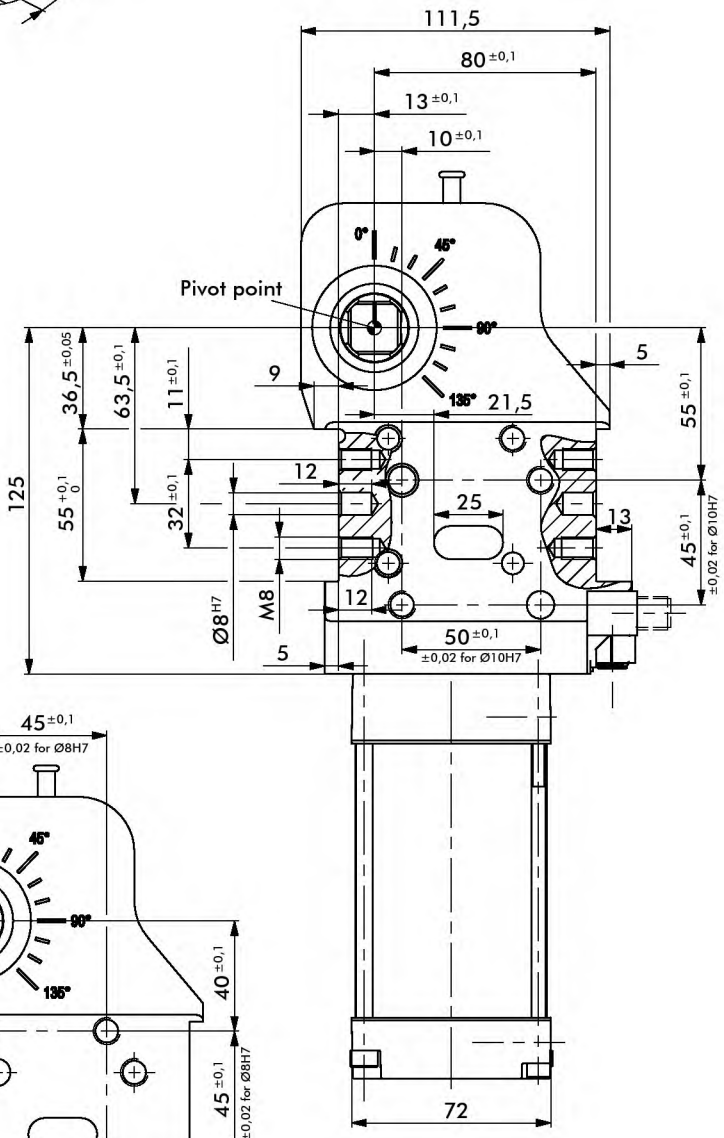

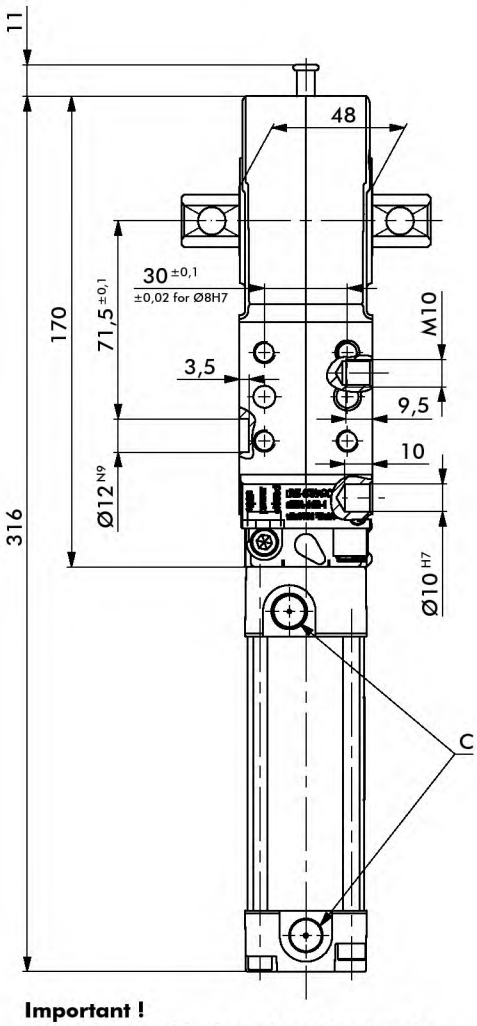

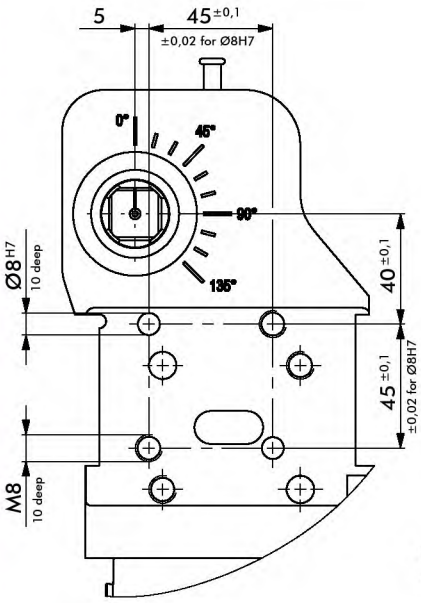

Important !
For optimal cushioning external pneumatic one-way, flow control valves should be used.

Power by compressed air, max. 6 bar operation with oil-free air is permissible.
The connector socket and the cable are not supplied with the unit.

mm [INCH]
THIRD ANGLE PROJECTION

Dimensions and technical information are subject to change without notice