ProfiNet Device IP67 with
[M12 socket, contact 4] → 8 inputs or 8 outputs
[M12 socket, contact 2] → 8 diagnosis or 8 function inputs or 8 outputs

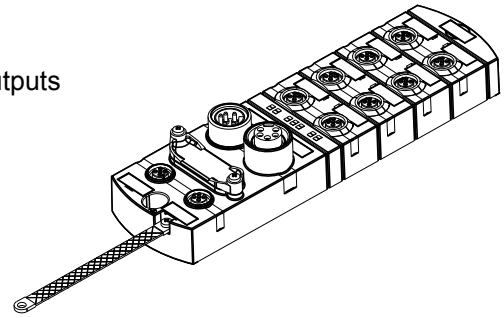

EMC

EN 61131-2

EN 61000-4-2 ESD	: Contact ± 4 kV, air ± 8 kV
EN 61000-4-3 RF-Field + GSM	: 10 V/m
EN 61000-4-4 Burst	: ± 2 kV
EN 61000-4-5 Surge	: asym./symm. ± 500 V (DC net input) asym. ± 1 kV (Signal connections)
EN 61000-4-6 HF-asymmetric	: 10 V
EN 61000-4-8 Magnetic field 50 Hz	: 30 A/m
EN 61000-6-4 Interference field strength	: QP 40 dBµV/m (30 - 230 MHz) QP 47 dBµV/m (230 - 1000 MHz) Class A

Ambient conditions

Operating temperature	: -25 °C ... +55 °C
Storage temperature	: -25 °C ... +70 °C
Enclosure type according to EN 60529	: IP67

Mechanical ambient conditions

Oscillation according to EN 60068 Part 2-6	: 10 – 58 Hz; const. amplitude 0,35 mm 58 – 150 Hz; const. acceleration 20 g
Shock according to EN 60068 Part 2-27	: Amplitude 50 g, 11 ms duration

Connection possibilities

Supply cable	: 2 x connector 7/8" (male and female connector)
Bus cable	: 2 x M12 female connector 4-pin D-Code
Inputs / diagnosis inputs /Outputs	: 8 x 5-pin M12 female connectors A-Code

Miscellaneous

Dimensions (L x W x H)	: 225 x 63 x 42 mm
Mounting dimension	: 208,5 ±0,5 mm
Weight	: 760 g

Bus data

Transfer protocol	: ProfiNet IO
Transfer rates	: 100 MBit/s
Addressing	: via DCP

				Idx	Datum	Gepr.	**Data sheet**	
				a	12.01.07	BJ	MVK-MPNIO DIO8 (DIO8)	
				c	07.06.13	pl		
				Ges				
c	Oper. temperatur	07.06.13	as	MURR ELEKTRONIK			**Art.-No. 55289**	Blatt 1
b	Neues Gehäuse	24.06.13	sb					
Idx.	Änderung	Datum	Nam					2 Bl.
a	Erstausgabe	12.01.07	M.H.	Dateiname: 55289_db_e_c				

Technische Änderungen vorbehalten / *We reserve the right to change this specification* Schutzvermerk ISO 16016 beachten / *Refer to protection notice ISO 16016*
Vom EDV-System heruntergeladene bzw. ausgedruckte Dokumente besitzen informativen Charakter und unterliegen nicht dem Änderungsdienst / *Documents downloaded by the EDP system and/or printed out have only an informative character and are not subject to*

Vom EDV-System heruntergeladene bzw. ausgedruckte Dokumente besitzen informativen Charakter und unterliegen nicht dem Änderungsdienst / *Documents downloaded by the EDP system and/or printed out have only an informative character and are not subject to*
Technische Änderungen vorbehalten / *We reserve the right to change this specification*
Schutzvermerk ISO 16016 beachten / *Refer to protection notice ISO 16016*

Power supply

Operation voltage U_B	: 24 V DC
Operation voltage range	: 18 ... 30 V DC
Current consumption (without inputs)	: ≤ 150 mA
Sensor supply	: max. 200 mA per socket
Short circuit protection for sensors	: Multifuse, up to 100 mA load: automatic start-up from 100 mA load: a reset is required
Multi-fuse reaction time (time to trip)	: 1s at I_K >= 1 A and 23 °C
Connector	: 7/8” (max. 1.5 mm^2)
Reverse polarity protection, inputs	: yes

Inputs / Diagnosis

Delay time for signal change	: 2 up to 5 ms
Input characteristics	: EN 61131-2, Type 2

Outputs

Actuator current load	: max. 1.6 A per actuator
Cable length	: with 0,75 mm² max. 10 m with 0,34 mm² max. 5 m
Connector	: M12 (max. 0.75 mm^2)
Cycle frequency	: max. 50 Hz
Lamp load	: max. 10 W